DRIVING CHANGE

Installation manual
Van flyscreen door
Ducato

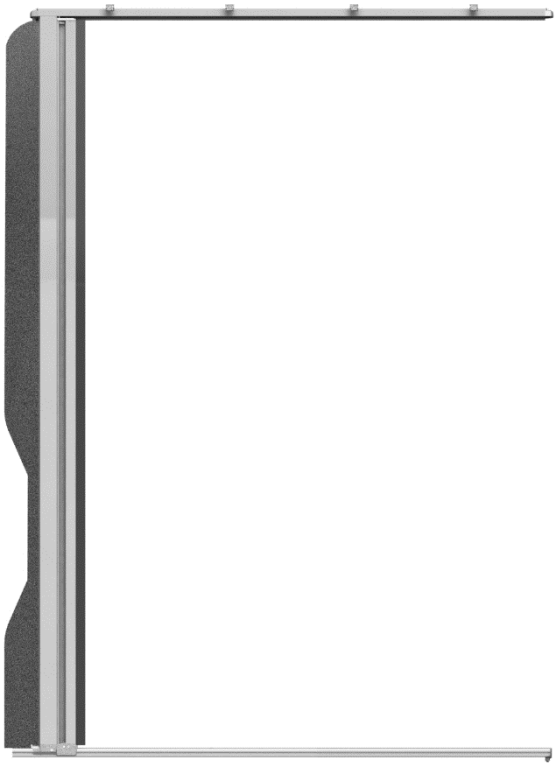

Horrex b.v. Van Hennaertweg 27 2952CA Alblasserdam Horrex.nl Info@horrex.nl

Contents

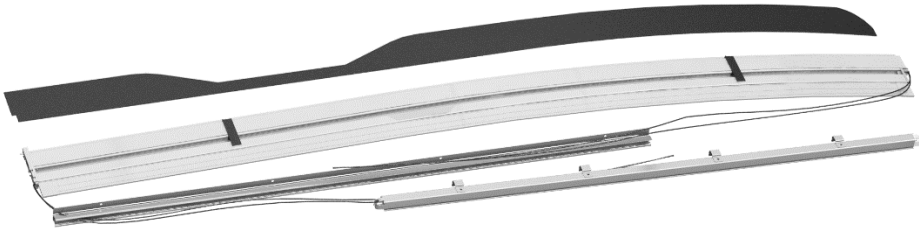

- Cassette and pullbar
- Top profile
- Bottom profile
- Panel
- Screw 3,5 x 16mm (Type 1)
- Screw 2,9 x 9,5mm (Type 2)

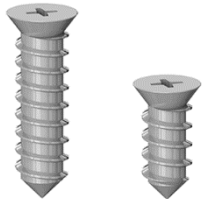

Necessities

- Drill 2,5mm
- Tape measure
- Double sided tape
- Screwdrivers (PH1, PH2)
- Allen key 2mm

Warning: This product may only be installed by a professional.
Horrex BV is not liable for damage caused by the assembly of this product.

1 Place the bottom profile on the wooden floor. Make sure to slide the profile against the rubber.
Fasten the profile with 4 type 1 screws.

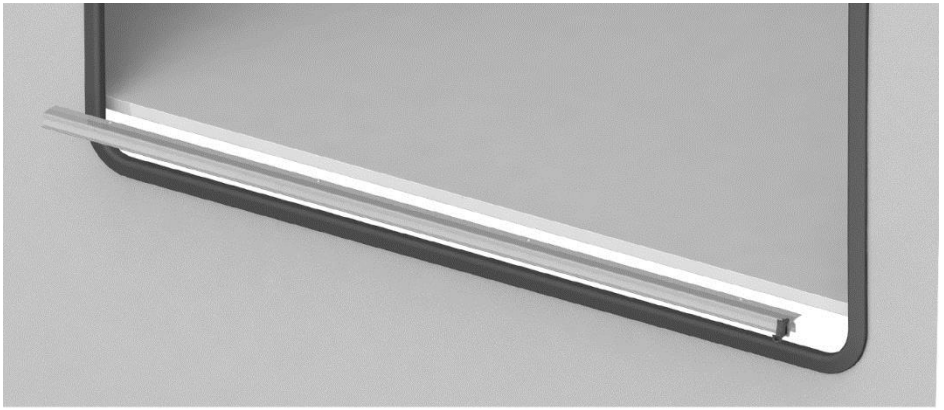

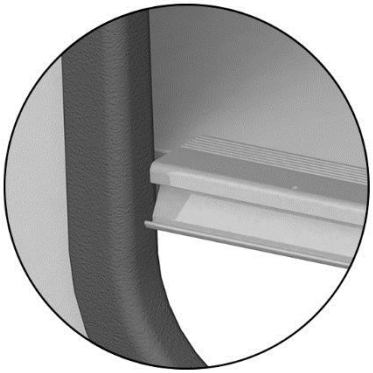

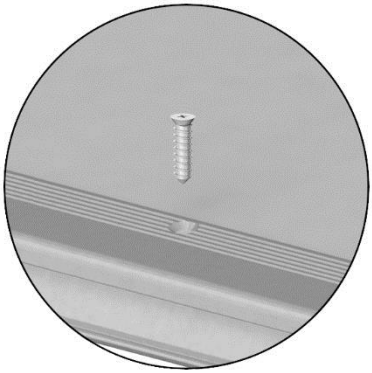

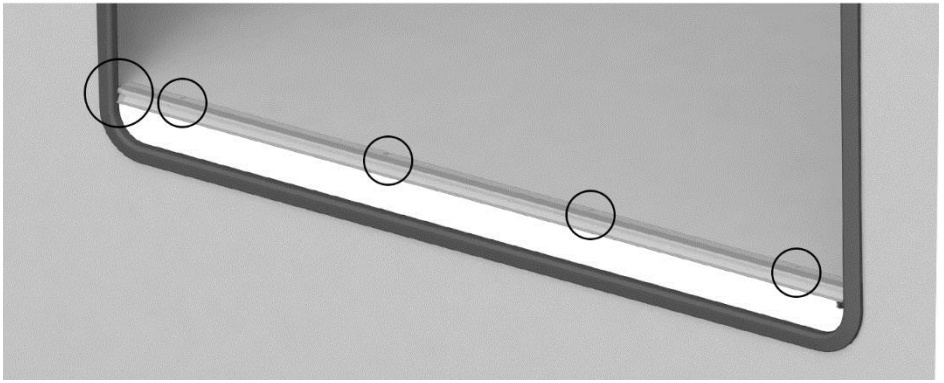

2 Remove the upper part of the door rubber from the body of the van.

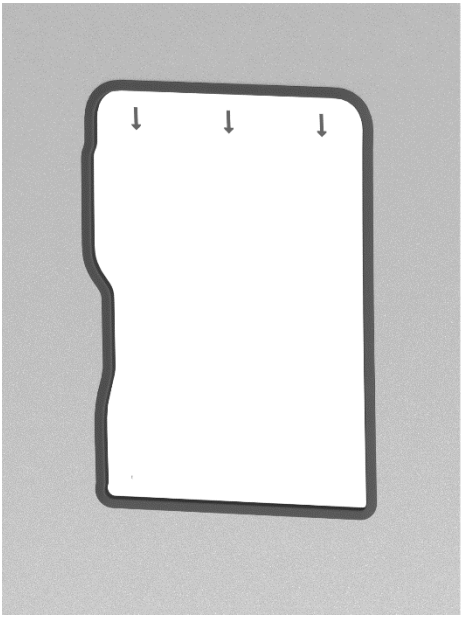

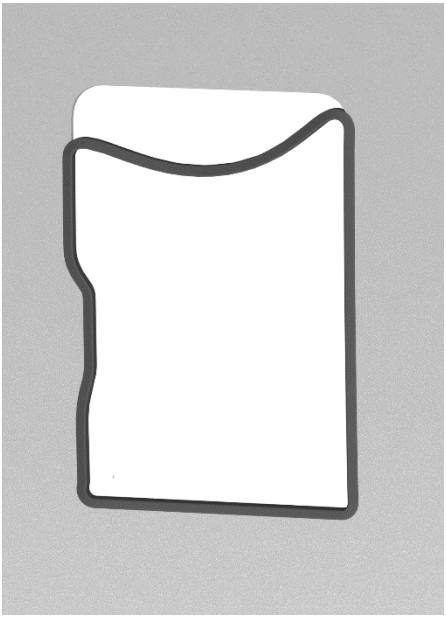

3 Put the metal clips on the metal edge of the body of the van. Mount the top guider as far as possible to the front.

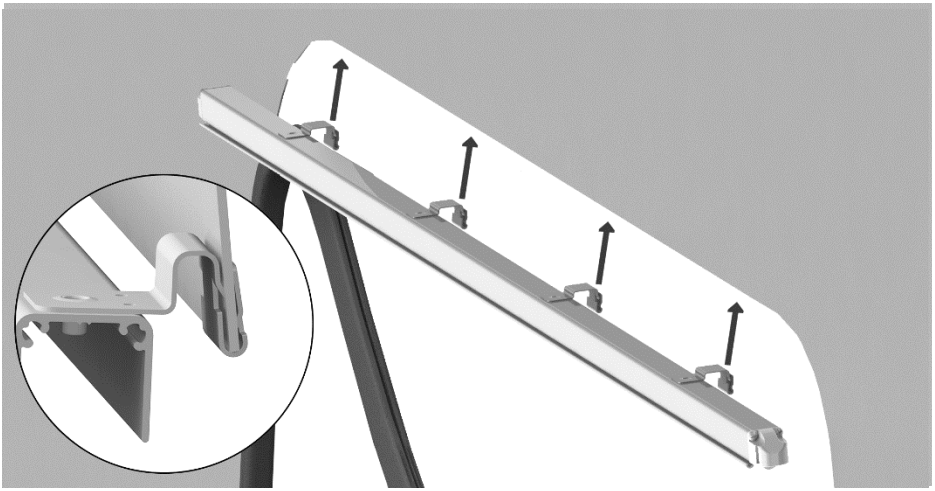

4 Put the rubber back onto the van.

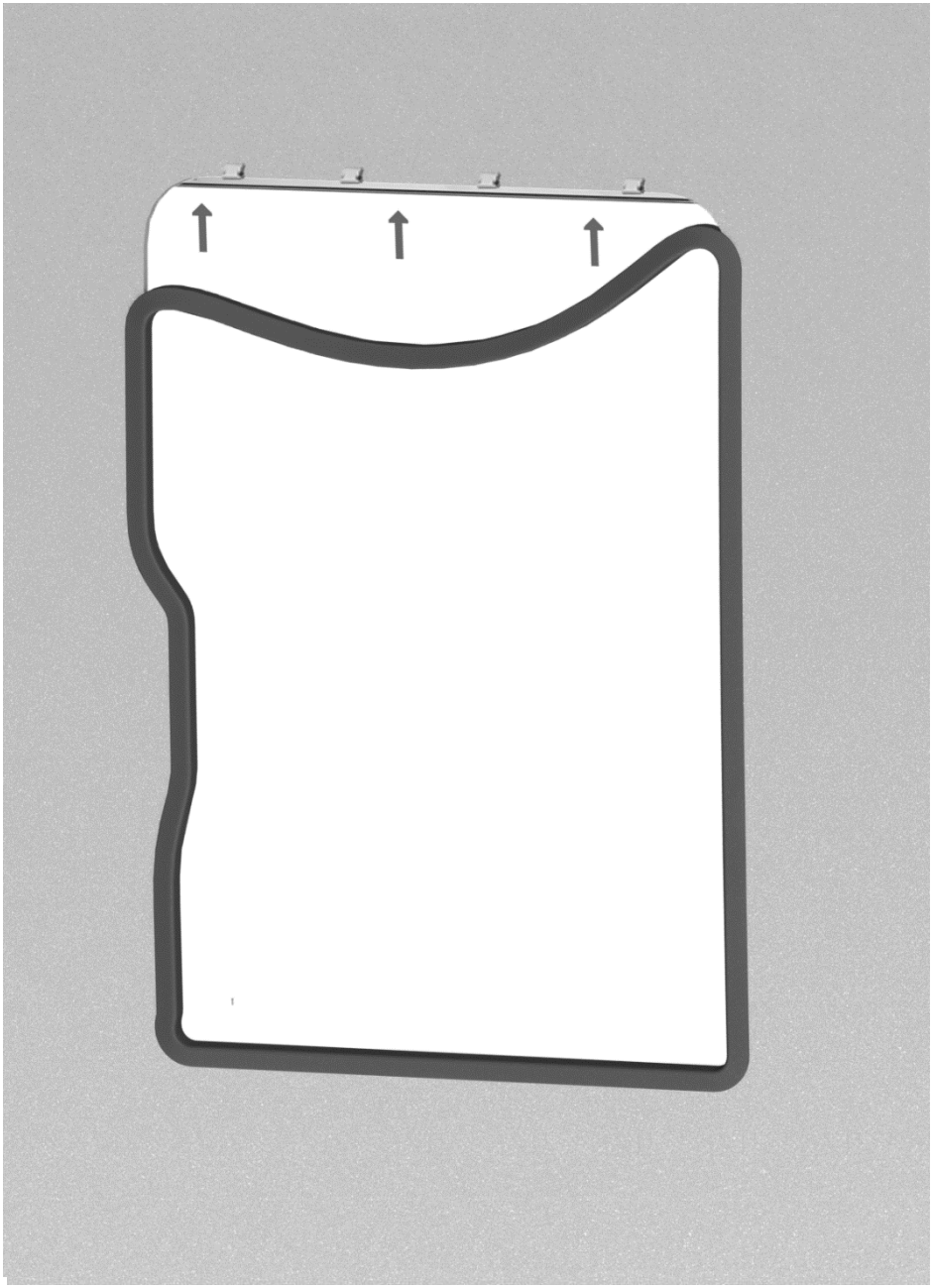

5 Slide the topside of the cassette and pullbar into the slot on the top profile. Make sure the cords run through the middle of the slider also make sure to leave the clips holding the cassette and pull bar together on during assembly.

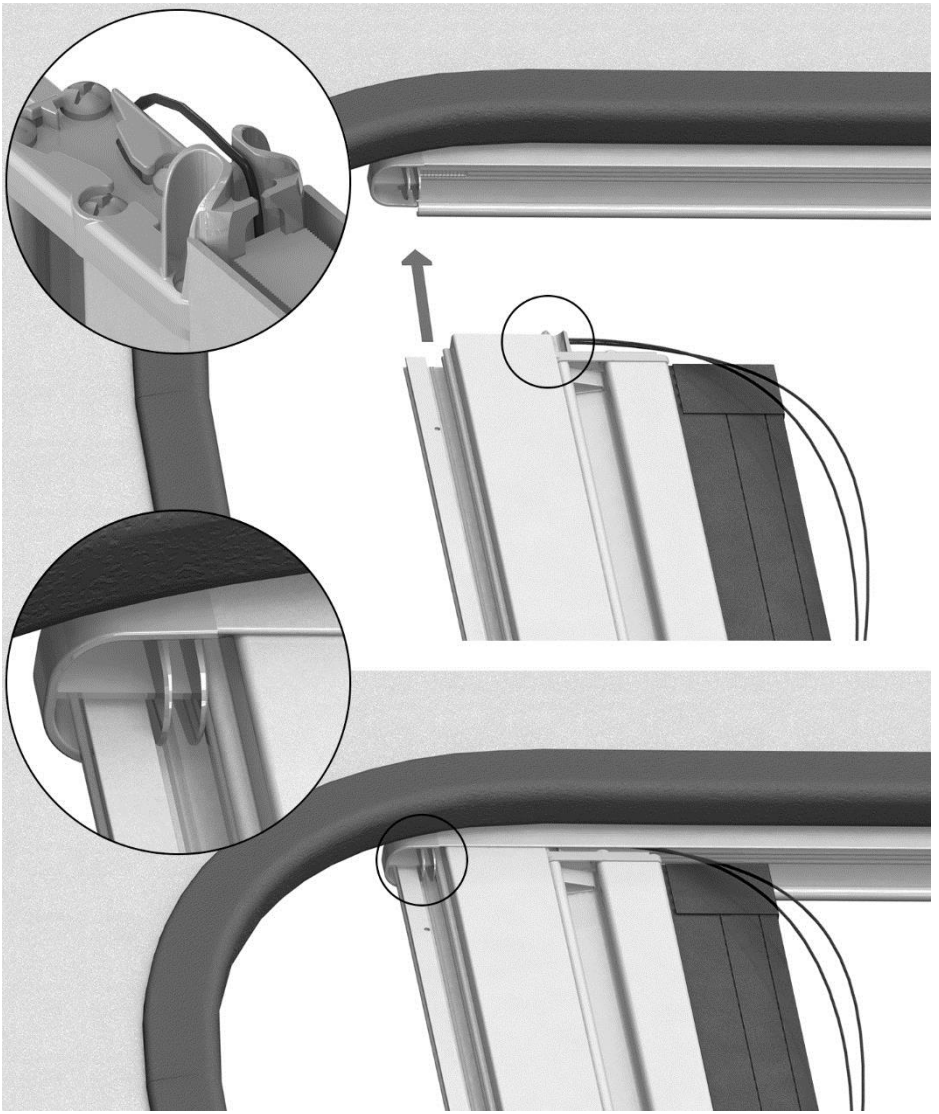

6 Place the bottom of the cassette and pullbar assembly onto the bottom profile.

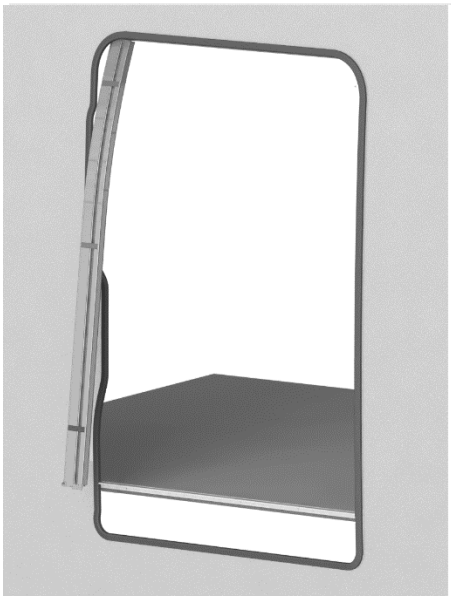

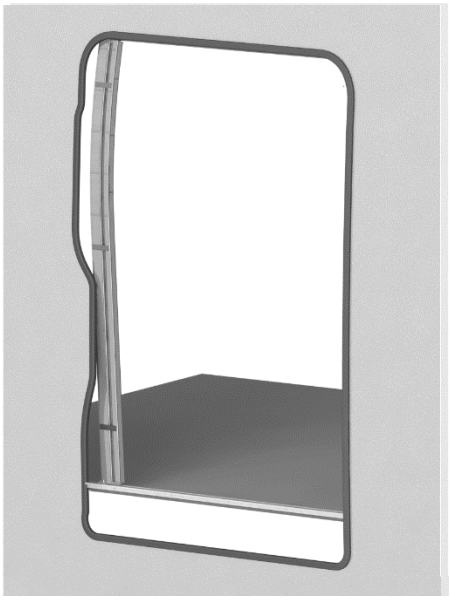

7 When the cassette and pullbar are vertical fasten the cassette to the bottom profile using 2 type 2 screws.

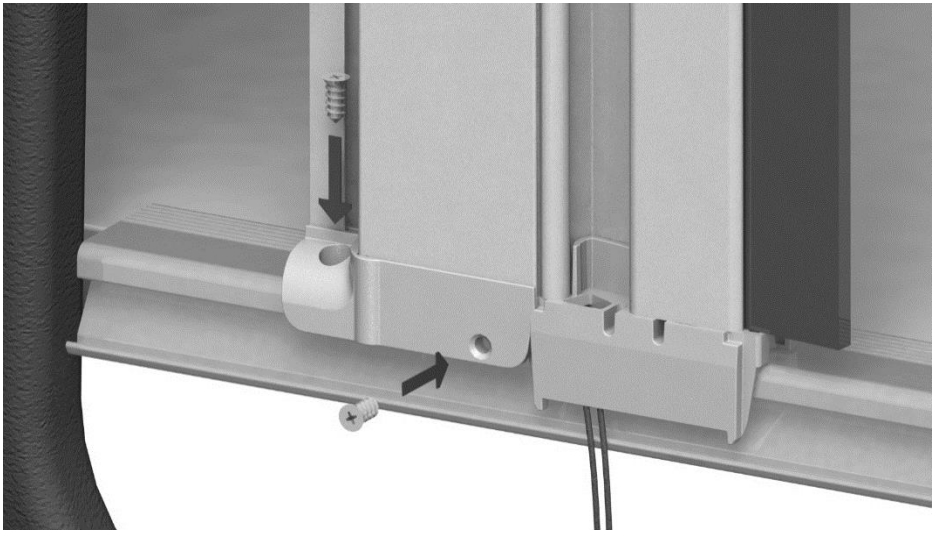

8 Fasten the sliderclamp to the slider with 2 type 2 screws make sure the cords are not tangled.

9 Fix the cassette to the interior or object connected to the vehicle body using 2 type 1 screws. This step might not be necessary in your situation, it is version dependent.

10 insert the cord tensioner as shown.

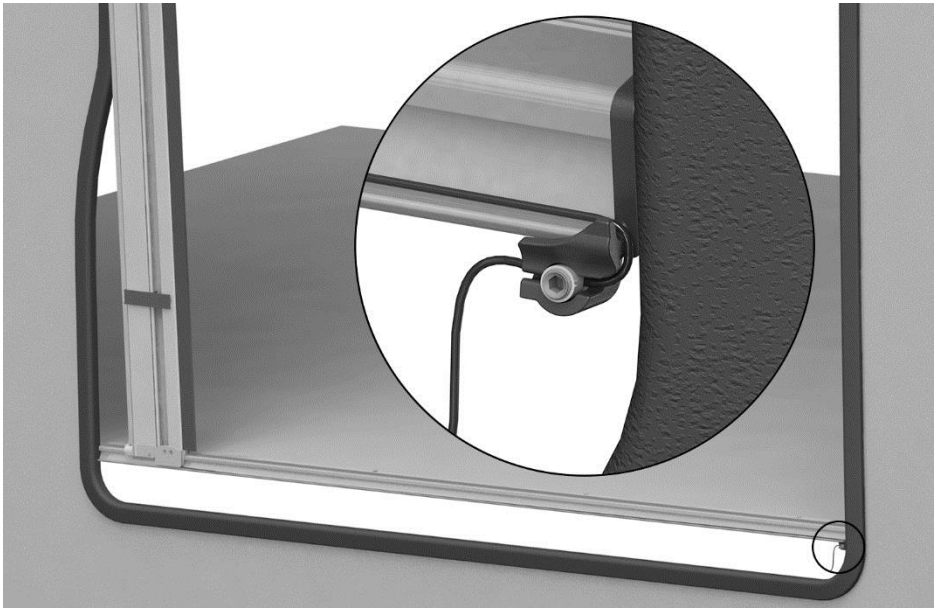

11 Put the cords under tension by unscrewing the set screw, pulling on the cords and fastening the set screw.

12 Position the top cord tensioner into the top profile endcap. And put the cords under tension.

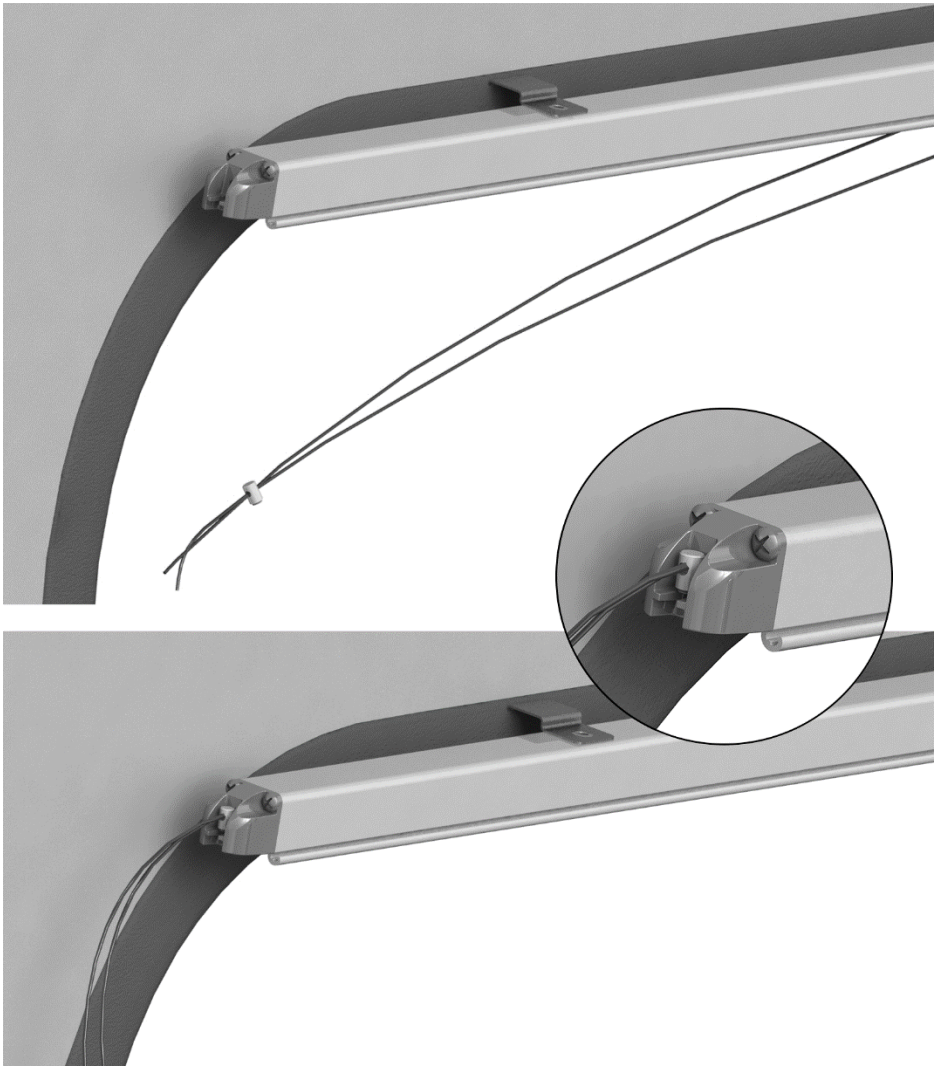

13 Remove the clips holding the cassette and pullbar together and test the door. Use PTFE spray on the track to ensure the track is lubricated.

14 When sliding the pullbar to the front side of the door the clearance should be within 2-5mm.

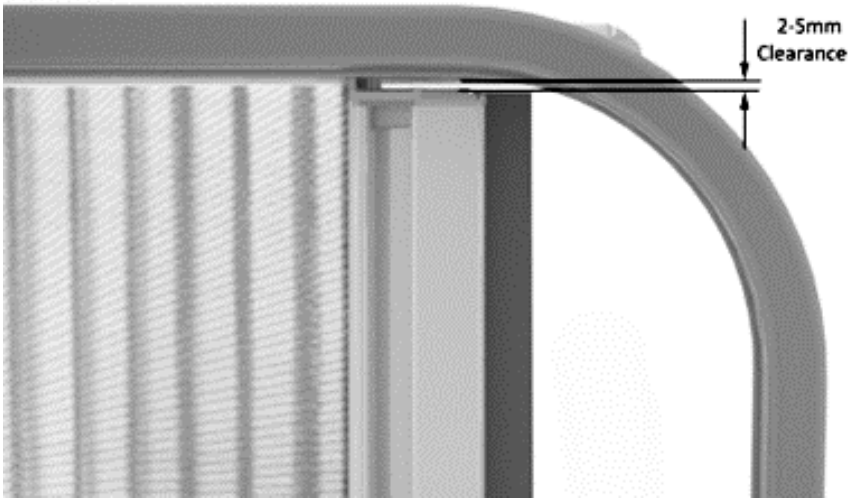

15 Make sure the movement of the pullbar is acceptable.

To lower the resistance put both cords under less tension, to raise the resistance put both cords under more tension.

When the pullbar is perfectly vertical and aligned with the cassette go to step 16.
If the pullbar is angled forward put the bottom cord under more tension by sliding cord tensioner B further into the profile.
If the pullbar is angled backward put the upper cord under more tension.

16 insert the panel in the slot.

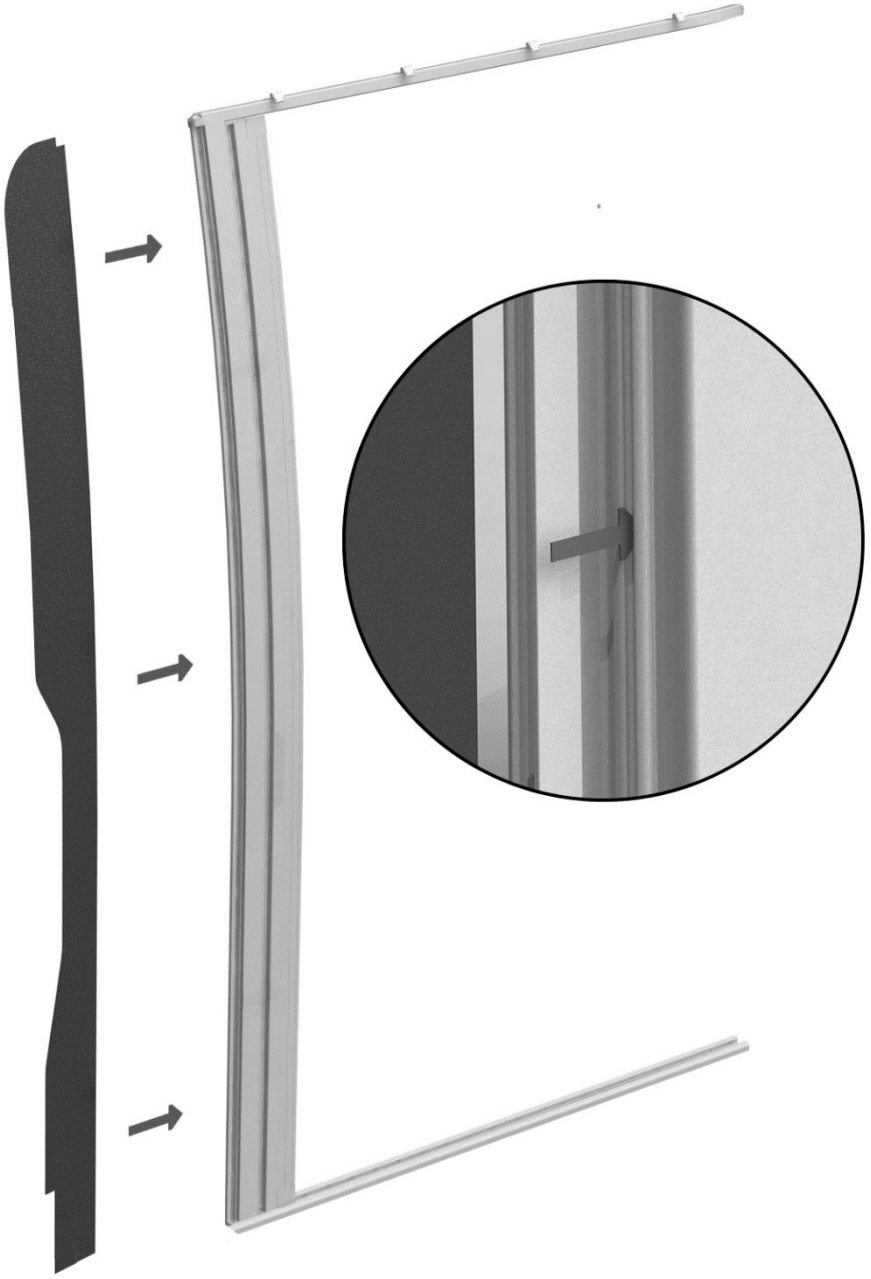
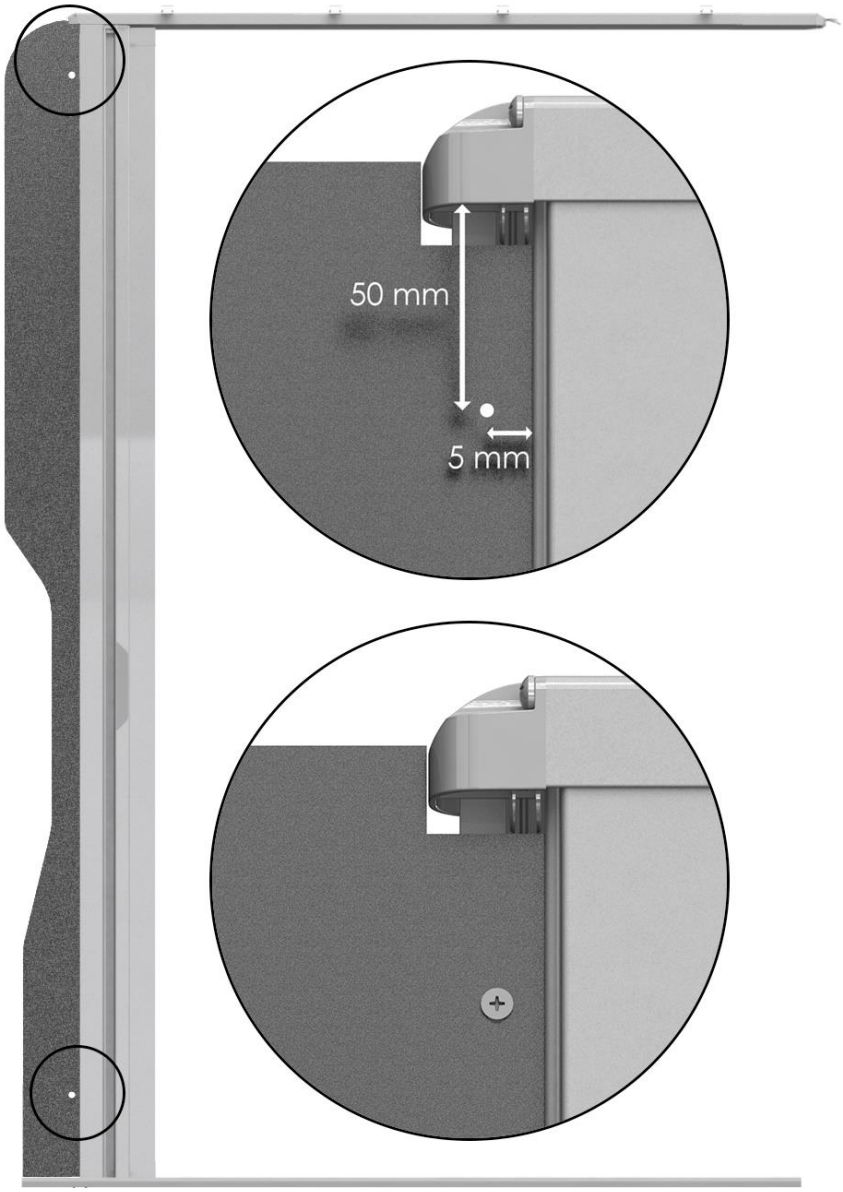
17 Drill two holes (2,5mm) through both the panel and cassette on the top and bottom. Fasten the panel to the cassette with double sided tape and 2 type 2 screws.